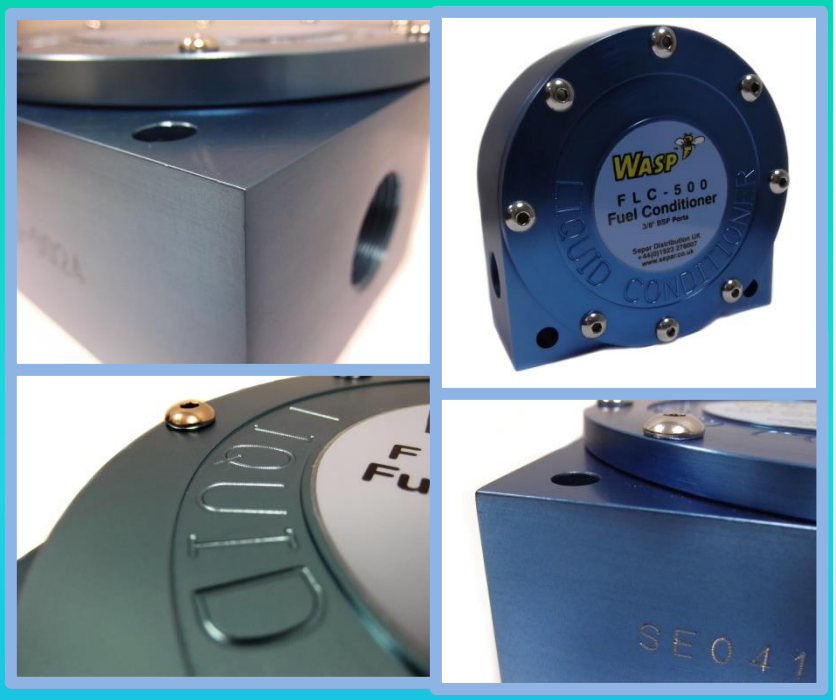

Pure Fuel Systems

WASP Fuel Conditioner Catalogue

Rev 1701

WASP PFS Ltd

3 Kingley Park, Station Road,
Kings Langley, Herts, WD4 8GW

Tel +44(0)1923 606600
www.wasp-pfs.com
sales@wasp-pfs.com

WASP PFS Ltd, 3 Kingley Park, Station Road, Kings Langley, Hertfordshire, WD4 8GW
Tel +44(0)1923 606600 Fax +44(0)1923 267463 sales@wasp-pfs.com www.wasp-pfs.com

Content

WASP PFS Ltd, 3 Kingley Park, Station Road, Kings Langley, Hertfordshire, WD4 8GW
Tel +44(0)1923 606600 Fax +44(0)1923 267463 sales@wasp-pfs.com www.wasp-pfs.com

Range Overview

Model	Design	Primary Material	Flow rate	Port size
W-FLC-500	D-shaped	Aluminium	to 500 lit/hr	3/8" BSP
W-FLC-1000	D-shaped	Aluminium	to 1000 lit/hr	1/2" BSP
W-FLC-1500	D-shaped	Aluminium	to 1500 lit/hr	3/4" BSP
W-FLC-2500	D-shaped	Aluminium	to 3600 lit/hr	1" BSP
W-FLC-3000	Stainless Steel	Stainless Steel	to 4000 lit/hr	1" BSP
W-FLC-5000	High Flow	Stainless Steel	to 18,000 lit/hr	2" BSP
W-FLC-5100	High Flow	Stainless Steel	to 70,000 lit/hr	4" BSP
W-FLC-5200	High Flow	Stainless Steel	to 84,000 lit/hr	4" BSP
W-FLC-5300	High Flow	Stainless Steel	to 100,000 lit/hr	6" BSP

The information contained in this catalogue is correct to the best of our knowledge; however always check with WASP PFS Ltd for the precise data relating to any given product.

Occasionally products are updated or have subtle re-designs. Given we produce a catalogue ever year to eighteen months; it is not always possible to include these changes. Speaking to WASP PFS Ltd is always the easiest way to ensure you have the latest information. Alternately you can visit our web site at www.wasp-pfs.com

Information in this document is for reference only, E&OE.
All sizes and weights are approximate.
Note: The manufacturer reserves the right to change or amend specifications without notice.

WASP PFS Ltd, 3 Kingley Park, Station Road, Kings Langley, Hertfordshire, WD4 8GW
Tel +44(0)1923 606600 Fax +44(0)1923 267463 sales@wasp-pfs.com www.wasp-pfs.com

Application Notes

A breakdown can be mechanical, electrical or biological; how you prepare for each will dictate how your system performs over the coming years.

In any engine, it is common knowledge that oil and water should be checked and changed periodically. Likewise annual services maintain the performance and ensure issues are found before they can cause costly breakdowns.

Yet who prevents the biological attack? Some use biocides in their fuel, yet these are harmful to humans and must be handled with care, moreover whist they can be efficient at killing live bacteria, they do not remove the causes of the issue and can also be harmful to the rubber gaskets/seals in the engine system; degrading them and causing leaks. Finally, such biocides can harm the fuel itself, causing sediment to form through oxidisation. However, there is a safe and clean alternative to such treatments.

In any diesel system (gas oil, MDO, fuel oil or any middle distillate fuel), a large proportion of the fuel pulled from the storage tank – be it in a generator, marine vessel, large vehicle, earthmoving equipment, railway locomotive etc. is used for cooling. This fuel is re-circulated around the engine and returned to the storage tank. This recirculation along with the use of a fuel filter/water separator is the key to the effectiveness of the W-FLC range.

The W-FLC should be installed in the fuel line before the main filter/water separator as in the example below. By installing in this way, the unit is able to literally condition the fuel in advance of its cleaning process. The effect of the W-FLC is to neutralise the live bacterial content of the fuel – stopping it from multiplying, and to increase the effectiveness of the water separator allowing it to trap more of the biomass; thus protecting the serviceable parts of the filter, and mean fewer replacement filter elements are needed.

Electron microscope images of such filter elements highlight the efficiency of these devices. The two images (right) show filter elements magnified 90 times. The same contaminated fuel was passed through both at the same time using the same pump. Before one, was an active conditioning unit, before the other was an identical conditioning unit which was not active.

As can be seen, the active unit protected the filter element as more contaminate/biomass was simply drained from the unit via the water separation stage, the un-activated unit clogged its filter element rapidly. You can find more detail on this experiment on the following page.

A WASP FLC device will protect your engine from fuel related breakdowns, neutralising bacterial content and aiding the effective removal of sludge and other biomass by your existing fuel filter/water separator.

W-FLC-500 unit installed alongside a SEPAR SWK2000/5M fuel filter/water separator

WASP PFS Ltd, 3 Kingley Park, Station Road, Kings Langley, Hertfordshire, WD4 8GW
Tel +44(0)1923 606600 Fax +44(0)1923 267463 sales@wasp-pfs.com www.wasp-pfs.com

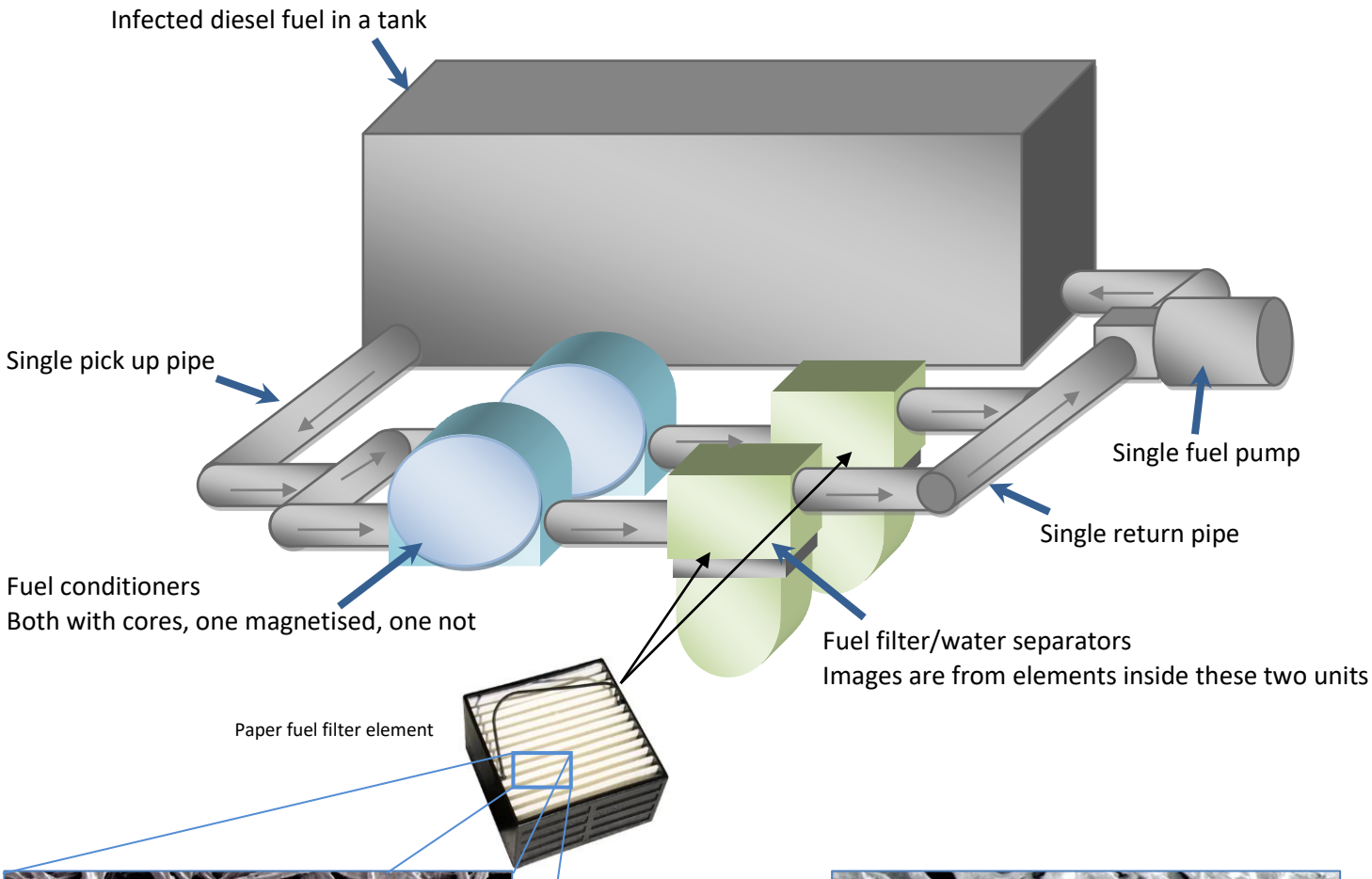

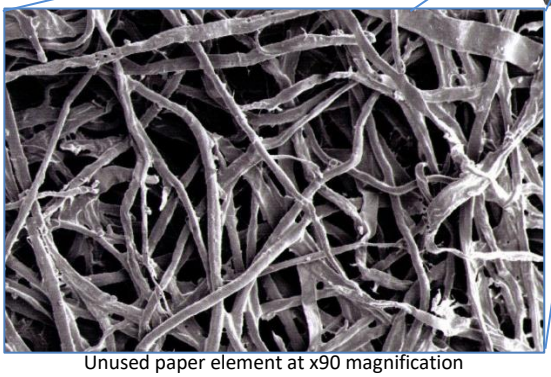
Unused paper element at x90 magnification

Unused paper element at x270 magnification

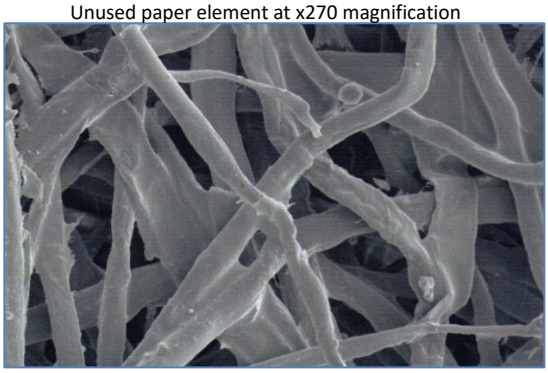

Fuel was re-circulated through the system, equally though both conditioners and filters for 35 hours.

After that period the two fuel filter elements were removed and examined under an electron microscope.

To the left are clean elements for reference.

To the right are the filters after use, top right is the element from magnetised fuel conditioner leg.

To the right, bottom is the element from non-magnetised fuel conditioner leg.

Notice the severe extra contamination build up on the non-magnetised leg.

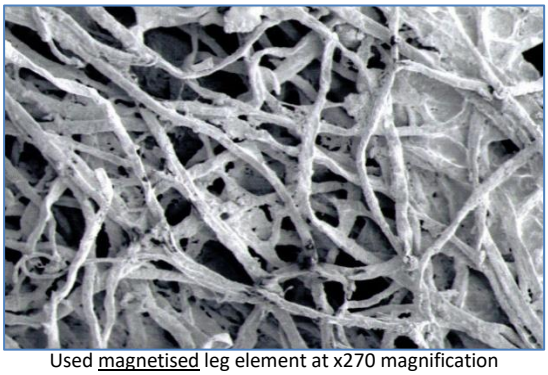
Used magnetised leg element at x270 magnification

Used non-magnetised leg at x270 magnification

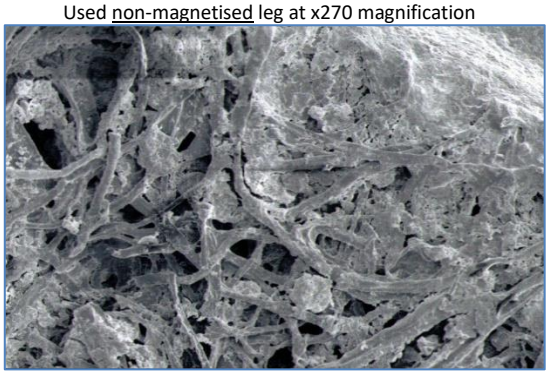

WASP PFS Ltd, 3 Kingley Park, Station Road, Kings Langley, Hertfordshire, WD4 8GW
Tel +44(0)1923 606600 Fax +44(0)1923 267463 sales@wasp-pfs.com www.wasp-pfs.com

Fuel conditioning is vital for a clean running engine. Clean fuel means fewer emissions (smoke), more efficiency and fewer engine breakdowns. Follow this simple guide to ensure correct installation and you will find the WFLC enhances your fuel system and its reliability.

WASP FLC fuel conditioners are bidirectional, in other words there is no specific input and output port. Fuel can flow in either direction, so installation is straight forward enough, however the rounded section of the unit's body must always be pointing upwards or sideways. We prefer straight connections, and do not recommend 90° fittings.

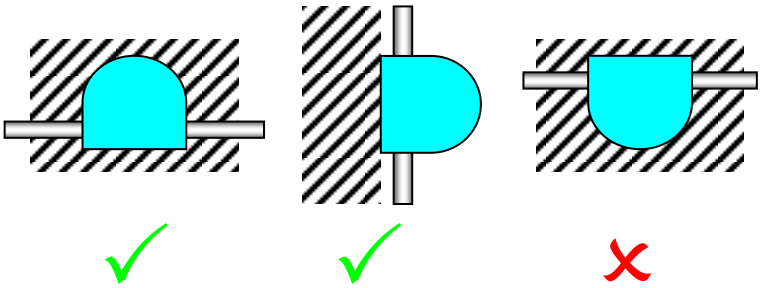

The WASP FLC is designed to be installed on the suction side of the pump, just before the primary filter.

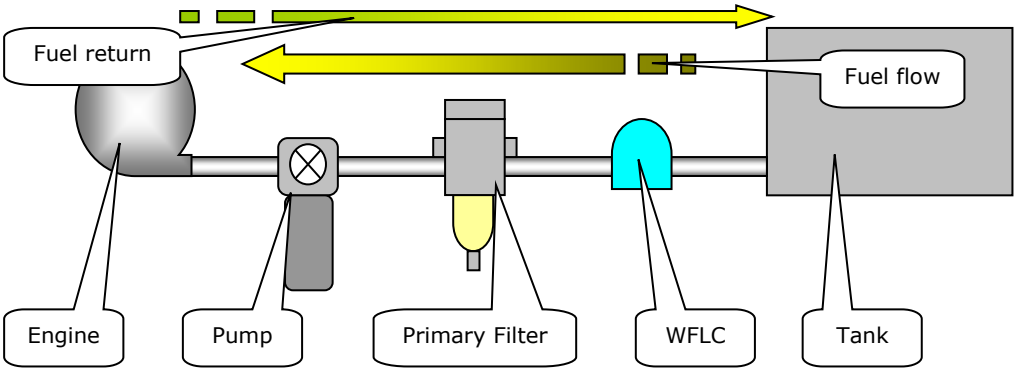

Take care when installing the WFLC, we recommend using a qualified engineer or company, however as long as the correct procedures are followed and the installer complies with all applicable safety procedures the installation process is simple and straightforward.

As the WFLC can be used for middle distillate fuel, and if working around diesel or similar, extinguish all naked flames or other sources of ignition and ensure adequate ventilation in the area of installation. We strongly recommend the use of safety glasses and fuel resistant gloves. DO NOT mount the WFLC near to navigational equipment or devices sensitive to magnetic fields.

Ensure the engine or pumps which could affect the unit are switched off and the fuel or liquid supply is isolated. Ideally full flow ball valves should be installed before and after the unit to allow for complete isolation for installation. Install the WFLC unit using fittings and pipe/hose line of appropriate diameter, material and quality as recommended by your engine or machine manufacturer. Apply fuel resistant sealant to all connectors, we do not recommend Teflon tape (PTFE or similar) as fuel can cause pieces of the Teflon tape to break off and flow into the fuel system. We recommend using a pliable, non-hardening, diesel fuel resistant paste or gasket forming sealant.

We recommend using a mounting bracket (non ferrous) – do not use steel due to the magnetic properties of the WFLC. The units can be directly bolted to a surface assuming there are no vibrations to worry about. If in doubt, use anti-vibration mounts. Ensure all connections / fittings are tight, open any ball valves and use the air bleed on the primary filter or pump to bleed the system. Check for any leaks and remedy as appropriate; the WFLC has now been successfully installed.

WASP PFS Ltd, 3 Kingley Park, Station Road, Kings Langley, Hertfordshire, WD4 8GW
Tel +44(0)1923 606600 Fax +44(0)1923 267463 sales@wasp-pfs.com www.wasp-pfs.com

W-FLC-500

Model	W-FLC-500
Ports	3/8" BSP-P female
Power required	None
Dimensions	102x102x42 mm
Weight (approximate)	900g
Fuel flow rate (gravity fed)	500 lit/hr
Material	Marine Grade corrosion resistant 6061 Aluminium
Seals	Hydrogenated Nitrile Butadiene Rubber (HNBR)
Case	Anodising Light Blue with two mounting holes at the bottom corners

Dimensions

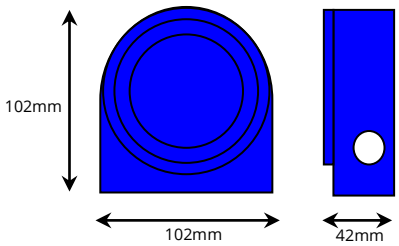

WASP PFS Ltd, 3 Kingley Park, Station Road, Kings Langley, Hertfordshire, WD4 8GW
Tel +44(0)1923 606600 Fax +44(0)1923 267463 sales@wasp-pfs.com www.wasp-pfs.com

W-FLC-1000 and W-FLC-1500

Model	W-FLC-1000	W-FLC-1500
Ports	1/2" BSP-P female	3/4" BSP-P female
Power required	None	
Dimensions	127x134x58mm	127x134x58mm
Weight (approximate)	2500g	2500g
Fuel flow rate (gravity fed)	1000 lit/hr	1500 lit/hr
Material	Marine Grade corrosion resistant 6061 Aluminium	
Seals	Hydrogenated Nitrile Butadiene Rubber (HNBR)	
Case	Anodising Light Blue with two mounting holes at the bottom corners	

Dimensions

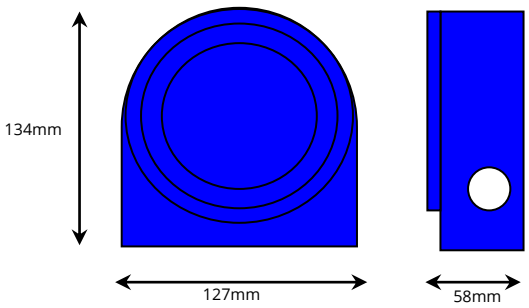

WASP PFS Ltd, 3 Kingley Park, Station Road, Kings Langley, Hertfordshire, WD4 8GW
Tel +44(0)1923 606600 Fax +44(0)1923 267463 sales@wasp-pfs.com www.wasp-pfs.com

W-FLC-2500

Model	W-FLC-2500
Ports	1” BSP-P female
Power required	None
Dimensions	175x170x77mm
Weight (approximate)	4500g
Fuel flow rate (gravity fed)	2500 lit/hr
Material	Marine Grade corrosion resistant 6061 Aluminium
Seals	Hydrogenated Nitrile Butadiene Rubber (HNBR)
Case	Anodising Light Blue with two mounting holes at the bottom corners

Dimensions

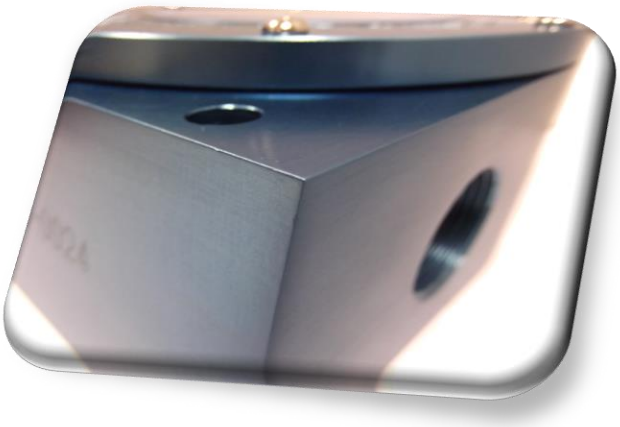

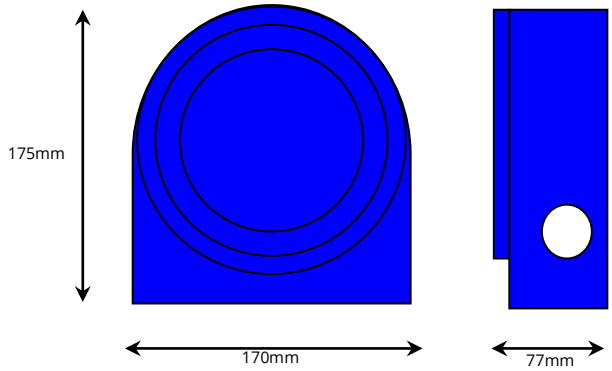

WASP PFS Ltd, 3 Kingley Park, Station Road, Kings Langley, Hertfordshire, WD4 8GW
Tel +44(0)1923 606600 Fax +44(0)1923 267463 sales@wasp-pfs.com www.wasp-pfs.com

W-FLC-3000

Model	W-FLC-3000
Ports	1” BSP-P female
Power required	None
Dimensions	236 (height) x 173 (dia) mm
Weight (approximate)	2500g
Fuel flow rate (gravity fed)	3500 lit/hr
Material	316 Stainless steel
Seals	Viton (R)
Case	Bright 316 Stainless steel with clamp for bowl/lid connection

Dimensions

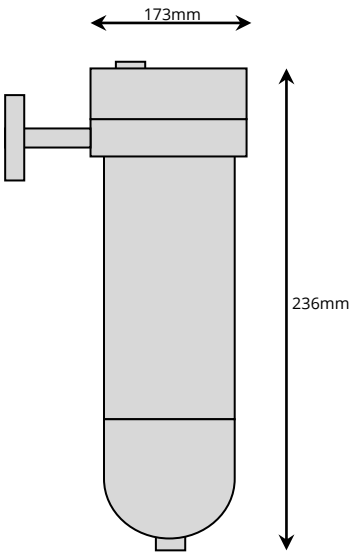

WASP PFS Ltd, 3 Kingley Park, Station Road, Kings Langley, Hertfordshire, WD4 8GW
Tel +44(0)1923 606600 Fax +44(0)1923 267463 sales@wasp-pfs.com www.wasp-pfs.com

W-FLC-4000 range

Model	W-FLC4000
Ports, dimension A	2" BSP-P female or male
Cores	1
Magnetic Strength	9000 gauss Rare earth neodymium iron boron
Approx Flow (gravity fed)	< 15000 lit/hr
Body width (mm)	200
Body Depth (mm)	110
Body Height (mm)	254
Construction	304 Stainless Steel,
Seals	HNBR
Magnet grade	N42SH – inspected and confirmed by hystergraph prior to use
Temperature	5º to 150ºC
Operating pressure	+/- 8 bar

WASP PFS Ltd, 3 Kingley Park, Station Road, Kings Langley, Hertfordshire, WD4 8GW
Tel +44(0)1923 606600 Fax +44(0)1923 267463 sales@wasp-pfs.com www.wasp-pfs.com

W-FLC-5000 range

Model	Ports (A)	Flange (option)	Filter Diameter (B)	Flange Spacing (C)	Height (D)	Cores	Flow
W-FLC-5020	2" BSP female	DN50/PN16	170mm	260mm	280mm	5	20,000l/h (20m^3/h)
W-FLC-5055	3" BSP female	DN80/PN16	220mm	360mm	335mm	7	55,000l/h (55m^3/h)
W-FLC-5085	4" BSP female	DN100/PN16	220mm	360mm	335mm	7	85,000l/h (85m^3/h)
W-FLC-5110	6" BSP female	DN150/PN16	325mm	470mm	420mm	9	110,000l/h (110m^3/h)
W-FLC-5140	8" BSP female	DN200/PN16	325mm	525mm	460mm	9	140,000l/h (140m^3/h)
W-FLC-5220	10" BSP female	DN250/PN16	406mm	760mm	600mm	16	220,000l/h (220m^3/h)
W-FLC-5310	12" BSP female	DN300/PN16	406mm	760mm	675mm	16	310,000l/h (310m^3/h)

Magnetic Strength	9000 gauss Rare earth neodymium iron boron
Magnet grade	N42SH – inspected and confirmed by hystergraph prior to use on tube surface
Construction	Magnet case 316 stainless steel, Other parts 304 Stainless Steel
Seals	Viton
Temperature	5º to 150ºC
Operating pressure	12 bar
Drain	1.25"